EANCOM® 2002 S3

REMADV

Remittance advice message

Edition 2016 Upd. 2021

1. Introduction 2
2. Message Structure Chart 3
3. Branching Diagram 5
4. Segments Description 10
5. Segments Layout 14
6. Example(s) 62

1. Introduction

Status

MESSAGE TYPE	: REMADV
REFERENCE DIRECTORY	: D.01B
EANCOM® SUBSET VERSION	: 005

Definition

The Remittance advice is a communication between buyer and supplier which provides a detailed accounting relative to a payment, or other form of financial settlement, on a specified date for the provision of goods and/or services as detailed in the advice.

Principles

A Remittance Advice is a notice of payment to be made.

A Remittance Advice may cover one or more commercial trade transactions (and related financial transactions), such as invoices, credit notes, debit notes, etc.

A Remittance Advice may include a cross reference to a Payment Order.

A single Remittance Advice may relate to both national and international settlements.

The remitted amounts for the whole remittance advice, per document referenced in the remittance advice and per line item in a document must all be expressed in the same currency as the payment currency.

Each Remittance Advice shall relate to only one settlement date.

A Remittance Advice may be initiated by either party according to agreements.

2. Message Structure Chart

EANCOM® 2002 S3 Edition 2016 Upd. 2021 Part II
REMADV Remittance advice message

UNA		1	C	1	- Service string advice
UNB		2	M	1	- Interchange header
Remittance Advice Heading Section					
UNH		3	M	1	- Message header
BGM		4	M	1	- Beginning of message
DTM		5	M	5	- Date/time/period
RFF		6	C	5	- Reference
FII		7	C	5	- Financial institution information
PAI		8	C	1	- Payment instructions
SG1			C	99	- NAD-SG3
NAD		9	M	1	- Name and address
SG3			C	5	- CTA-COM
CTA		10	M	1	- Contact information
COM		11	C	5	- Communication contact
SG4			C	5	- CUX-DTM
CUX		12	M	1	- Currencies
DTM		13	C	1	- Date/time/period
Remittance Advice Detail Section					
SG5			C	999999	- DOC-MOA-DTM-RFF-NAD-SG6-SG7-SG10
DOC		14	M	1	- Document/message details
MOA		15	M	5	- Monetary amount
DTM		16	C	5	- Date/time/period
RFF		17	C	5	- Reference
NAD		18	C	2	- Name and address
SG6			C	5	- CUX-DTM
CUX		19	M	1	- Currencies
DTM		20	C	1	- Date/time/period
SG7	*		C	100	- AJT-MOA-RFF-FTX-QTY-SG8
AJT		21	M	1	- Adjustment details
MOA		22	C	1	- Monetary amount
RFF		23	C	1	- Reference
FTX	+	24	C	5	- Free text
QTY	+	25	C	9	- Quantity
SG8	+		C	9	- TAX-MOA
TAX	+	26	M	1	- Duty/tax/fee details
MOA	+	27	C	9	- Monetary amount
SG10			C	9999	- DLI-MOA-PIA-SG11-SG12
DLI		28	M	1	- Document line identification
MOA		29	C	5	- Monetary amount
PIA		30	C	5	- Additional product id
SG11			C	5	- CUX-DTM
CUX		31	M	1	- Currencies
DTM		32	C	1	- Date/time/period
SG12			C	10	- AJT-MOA-RFF-SG13
AJT		33	M	1	- Adjustment details
MOA		34	C	1	- Monetary amount
RFF		35	C	1	- Reference
SG13	+		C	9	- TAX-MOA
TAX	+	36	M	1	- Duty/tax/fee details
MOA	+	37	C	9	- Monetary amount
Remittance Advice Summary Section					
UNS		38	M	1	- Section control

2. Message Structure Chart

MOA	39	M	99	- Monetary amount
UNT	40	M	1	- Message trailer
UNZ	41	M	1	- Interchange trailer

3. Branching Diagram

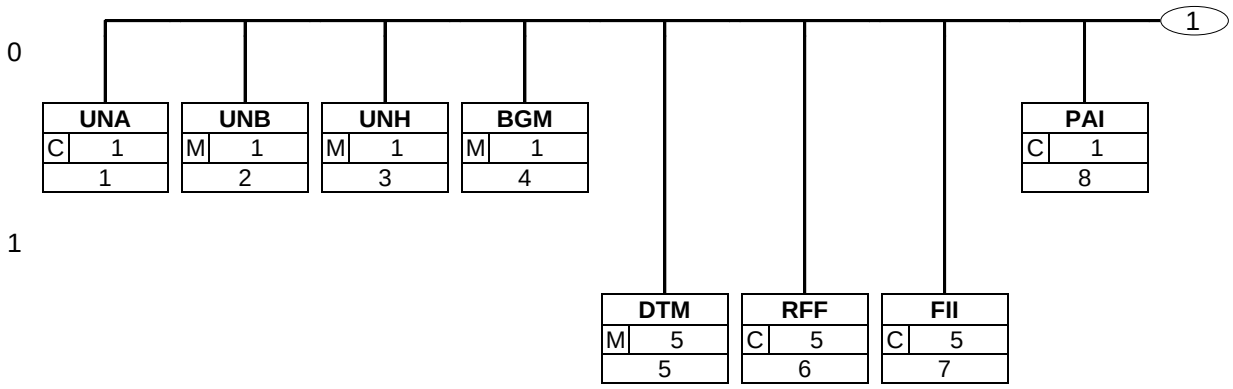

3. Branching Diagram

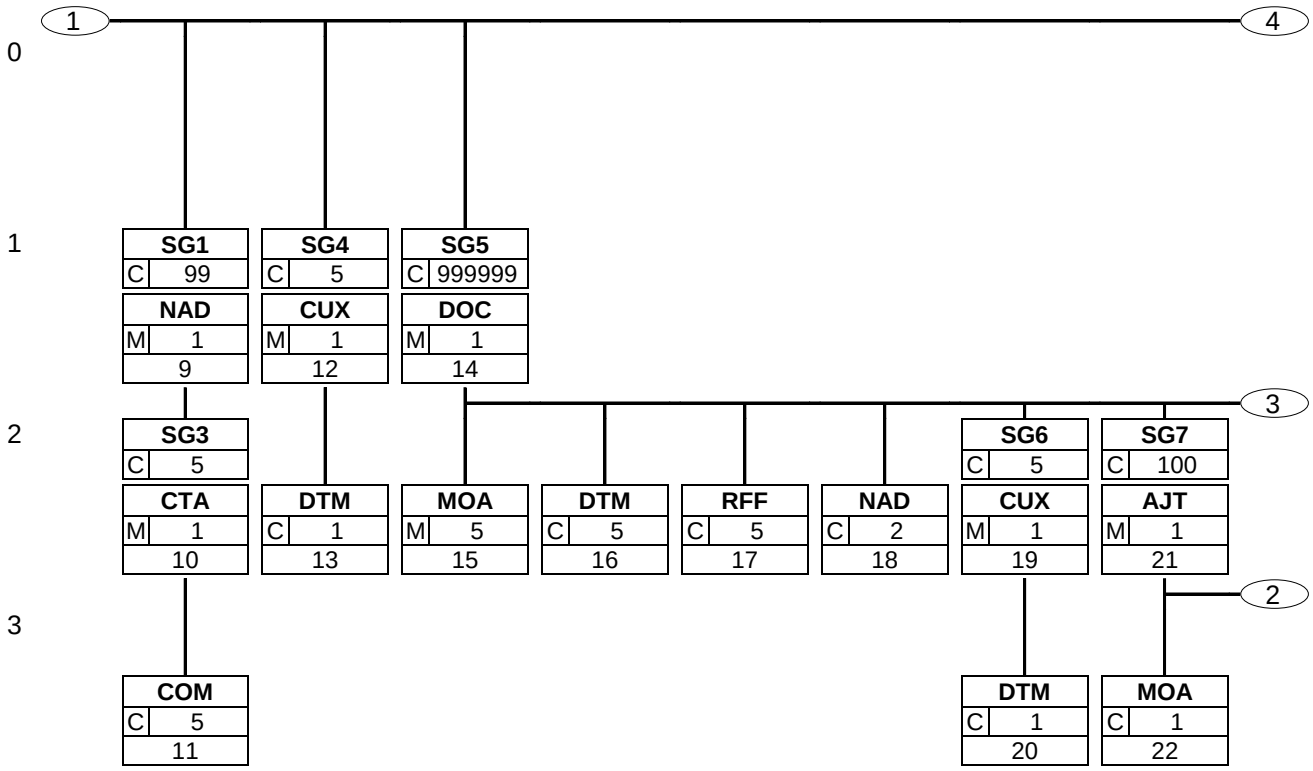

3. Branching Diagram

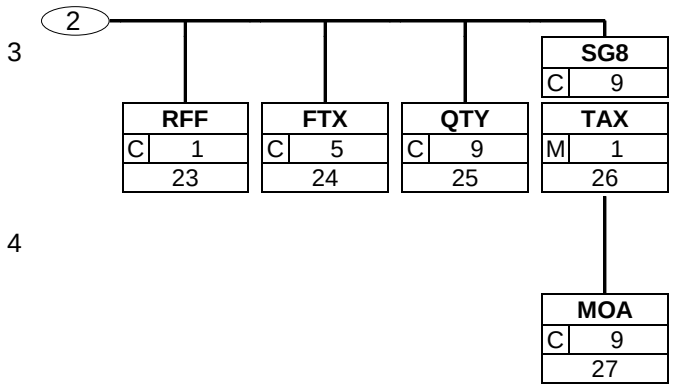

3. Branching Diagram

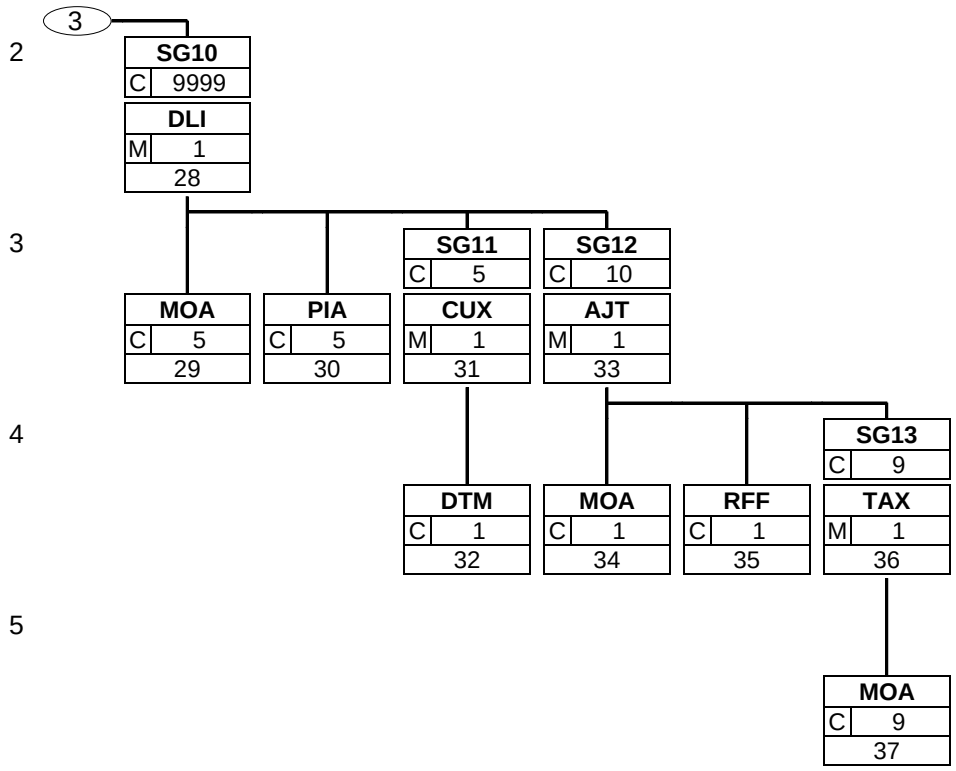

3. Branching Diagram

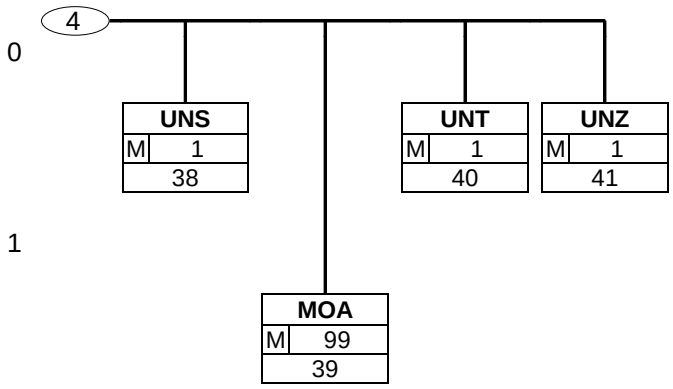

4. Segments Description

UNA - C 1 - Service string advice

The service string advice shall begin with the upper case characters UNA immediately followed by six characters in the order shown below. The same character shall not be used in more than one position of the UNA.

UNB - M 1 - Interchange header

This segment is used to envelope the interchange, as well as to identify both, the party to whom the interchange is sent and the party who has sent the interchange. The principle of the UNB segment is the same as a physical envelope which covers one or more letters or documents, and which details, both the address where delivery is to take place and the address from where the envelope has come.

Remittance Advice Heading Section

UNH - M 1 - Message header

This segment is used to head, identify and specify a message.

BGM - M 1 - Beginning of message

This segment is used to indicate the type and function of a message and to transmit its identifying number.

DTM - M 5 - Date/time/period

This segment is used to specify dates related to the complete remittance advice message.

RFF - C 5 - Reference

This segment is used to specify any references which relate to the complete remittance advice.

FII - C 5 - Financial institution information

This segment is used to identify financial institution information related to the parties involved in the Remittance Advice.

PAI - C 1 - Payment instructions

This segment is used by the sender of the Remittance Advice to indicate how payment is being made.

SG1 - C 99 - **NAD-SG3**

A group of segments identifying the parties involved in the transaction and, optionally the contact points and numbers.

NAD - M 1 - Name and address

This segment is used to identify the parties exchanging the Remittance Advice message, and if necessary, any associated parties. The identification of the payer and payee, and buyer and seller if different from the payer and payee, are mandatory in the Remittance Advice message.

SG3 - C 5 - **CTA-COM**

A group of segments identifying the contact person or department for a trading party and specifying the communication channel and number.

CTA - M 1 - Contact information

This segment is used to identify contact names or departments within the party specified in the NAD segment.

COM - C 5 - Communication contact

This segment identifies the communications number, and type of communications, for the person and/or department identified in the preceding CTA segment.

SG4 - C 5 - **CUX-DTM**

A group of segments specifying the currencies and related dates/periods valid for the whole Remittance Advice.

4. Segments Description

CUX - M 1 - Currencies

This segment is used to indicate currency information related to the complete remittance advice. The CUX segment may be omitted for national exchanges. The CUX segment is mandatory for international exchanges.

DTM - C 1 - Date/time/period

This segment is used to indicate the date on which a rate of exchange was quoted.

Remittance Advice Detail Section

SG5 - C 999999 - **DOC-MOA-DTM-RFF-NAD-SG6-SG7-SG10**

A group of segments providing details of all documents, e.g. invoices, statements, despatch advices, etc, to which the Remittance Advice refers. It includes information on the monetary amounts for each document and on any adjustments (with an indication of the reason for adjustments) and discounts. For information purposes an indication of the tax element can be provided.

DOC - M 1 - Document/message details

This segment is used to provide details of the documents, e.g., a group of invoices, to which the Remittance Advice refers. The detail section of the Remittance Advice is formed by a repeating groups of DOC segments. Individual document line item information is provided in the DLI segment.

MOA - M 5 - Monetary amount

This segment is used to provide monetary amounts related to the document specified in the previous DOC segment.

DTM - C 5 - Date/time/period

This segment is used to indicate the date of the document identified in the DOC segment.

RFF - C 5 - Reference

This segment is used to provide references related to the document identified in the DOC segment.

NAD - C 2 - Name and address

This segment is used to identify the buyer or delivery party when different to the buyer, for the current document.

SG6 - C 5 - **CUX-DTM**

A group of segments specifying the currencies and the related dates/periods valid of the referenced document where different to the remittance currency.

CUX - M 1 - Currencies

This segment is used to provide currency rate of exchange information used to convert amounts specified in the MOA segment for the referenced document, to an amount expressed in terms of the remittance/payment currency. This CUX segment will only be used when the currency or its rate of exchange is different from the default global currency or its rate of exchange specified in the CUX segment at heading level.

DTM - C 1 - Date/time/period

This segment is used to specify the date on which the rate of exchange was quoted.

SG7 - C 100 - **AJT-MOA-RFF-FTX-QTY-SG8**

A group of segments to indicate adjustment amounts and their referenced documents.

AJT - M 1 - Adjustment details

This segment is used to indicate the reason for an adjustment to the current document.

4. Segments Description

MOA - C 1 - Monetary amount

This segment is used to indicate the value of the adjustment amount.

RFF - C 1 - Reference

This segment is used to specify any references associated to the adjustment amounts.

FTX - C 5 - Free text

This segment is used to provide free form or coded text information which applies to the complete remittance advice message.

QTY - C 9 - Quantity

This segment is used to specify quantitative data, such as cumulative or promotional quantity across a payment period.

SG8 - C 9 - **TAX-MOA**

A group of segments specifying tax related information for the allowance or charge.

TAX - M 1 - Duty/tax/fee details

This segment is used to signify whether the processing adjustments are subject to tax.

MOA - C 9 - Monetary amount

This segment is used to specify in monetary terms the amount of tax due on the current document.

SG10 - C 9999 - **DLI-MOA-PIA-SG11-SG12**

A group of segments which may be used when required to provide details of individual line items in the reference document.

DLI - M 1 - Document line identification

This segment is used to identify individual line items within the document identified in the DOC segment.

MOA - C 5 - Monetary amount

This segment is used to indicate monetary amounts related to the line item identified in the DLI segment.

PIA - C 5 - Additional product id

This segment is used to provide the product identification for the line item detailed in the DLI segment, for the current document.

SG11 - C 5 - **CUX-DTM**

A group of segments identifying the currency and the related dates/periods of the line item where different to the remittance and document currency.

CUX - M 1 - Currencies

This segment is used to provide currency rate of exchange information to convert monetary amounts in the MOA segment, following the DLI segment, to an amount expressed in terms of the remittance/payment currency. This CUX segment will only be used when the currency or its rate of exchange is different for the line item to that expressed as a default currency in the CUX segment at DOC level.

DTM - C 1 - Date/time/period

This segment is used to specify the date on which the rate of exchange was quoted.

SG12 - C 10 - **AJT-MOA-RFF-SG13**

A group of segments to indicate adjustment amounts and their referenced documents for this line item.

AJT - M 1 - Adjustment details

This segment is used to indicate the reason for an adjustment to the current line identified in the DLI segment.

4. Segments Description

MOA - C 1 - Monetary amount

This segment is used to indicate the value of the adjustment amount for the current line item.

RFF - C 1 - Reference

This segment is used to specify any relevant references associated to the adjustment amounts for the current line item.

SG13 - C 9 - **TAX-MOA**

A group of segments specifying tax related information for the allowance or charge.

TAX - M 1 - Duty/tax/fee details

This segment is used to signify whether the processing adjustments are subject to tax.

MOA - C 9 - Monetary amount

This segment is used to specify in monetary terms the amount of tax due on the current document.

Remittance Advice Summary Section

UNS - M 1 - Section control

This segment is used to separate the detail and summary sections of the Remittance Advice message.

MOA - M 99 - Monetary amount

This segment is used to indicate the total amount being remitted in this remittance advice.

UNT - M 1 - Message trailer

This segment is a mandatory UN/EDIFACT segment. It must always be the last segment in the message.

UNZ - M 1 - Interchange trailer

This segment is used to provide the trailer of an interchange.

5. Segments Layout

This section describes each segment used in the EANCOM® Remittance advice message. The original EDIFACT segment layout is listed. The appropriate comments relevant to the EANCOM® subset are indicated.

Notes:

1. The segments are presented in the sequence in which they appear in the message. The segment or segment group tag is followed by the (M)andatory / (C)onditional indicator, the maximum number of occurrences and the segment description.

2. Reading from left to right, in column one, the data element tags and descriptions are shown, followed by in the second column the EDIFACT status (M or C), the field format, and the picture of the data elements. These first pieces of information constitute the original EDIFACT segment layout.

   Following the EDIFACT information, EANCOM® specific information is provided in the third, fourth, and fifth columns. In the third column a status indicator for the use of (C)onditional EDIFACT data elements (see 2.1 through 2.3 below), in the fourth column the restricted indicator (see point 3 on the following page), and in the fifth column notes and code values used for specific data elements in the message.

2.1 (M)andatory data elements in EDIFACT segments retain their status in EANCOM®.

2.2 Additionally, there are five types of status for data elements with a (C)onditional EDIFACT status, whether for simple, component or composite data elements. These are listed below and can be identified when relevant by the following abbreviations:

- REQUIRED	**R**	Indicates that the entity is required and must be sent.
- ADVISED	**A**	Indicates that the entity is advised or recommended.
- DEPENDENT	**D**	Indicates that the entity must be sent in certain conditions, as defined by the relevant explanatory note.
- OPTIONAL	**O**	Indicates that the entity is optional and may be sent at the discretion of the user.
- NOT USED	**N**	Indicates that the entity is not used and should be omitted.

2.3 If a composite is flagged as **N, NOT USED**, all data elements within that composite will have blank status indicators assigned to them.

3. Status indicators detailed in the fourth column which directly relate to the code values detailed in the fifth **column** may have two values:

- RESTRICTED	*****	A data element marked with an asterisk (*) in the fourth column indicates that the listed codes in column five are the only codes available for use with this data element, in this segment, in this message.
- OPEN		All data elements where coded representation of data is possible and a restricted set of code values is not indicated are open (no asterisk in fourth column). The available codes are listed in the EANCOM® Data Elements and Code Sets Directory. Code values may be given as examples or there may be a note on the format or type of code to be used.

4. Different colours are used for the code values in the segment details: restricted codes are in red and open codes in blue.

5. Segments Layout

Segment number: 1

UNA	- C	1 - Service string advice			
Function: To define the characters selected for use as delimiters and indicators in the rest of the interchange that follows.					
		EDIFACT	GS1	*	Description
UNA1	Component data element separator	M an1	**M**	*	Used as a separator between component data elements contained within a composite data element (default value: ":")
UNA2	Data element separator	M an1	**M**	*	Used to separate two simple or composite data elements (default value: "+")
UNA3	Decimal notation	M an1	**M**	*	Used to indicate the character used for decimal notation (default value:".")
UNA4	Release indicator	M an1	**M**	*	Used to restore any service character to its original specification (value: "?").
UNA5	Reserved for future use	M an1	**M**	*	(default value: space)
UNA6	Segment terminator	M an1	**M**	*	Used to indicate the end of segment data (default value: " ' ")

Segment Notes:

The service string advice shall begin with the upper case characters UNA immediately followed by six characters in the order shown below. The same character shall not be used in more than one position of the UNA.
This segment is used to inform the receiver of the interchange that a set of service string characters which are different to the default characters are being used.
When using the default set of service characters, the UNA segment need not be sent. If it is sent, it must immediately precede the UNB segment and contain the four service string characters (positions UNA1, UNA2, UNA4 and UNA6) selected by the interchange sender.
Regardless of whether or not all of the service string characters are being changed every data element within this segment must be filled, (i.e., if some default values are being used with user defined ones, both the default and user defined values must be specified).
When expressing the service string characters in the UNA segment, it is not necessary to include any element separators.
The use of the UNA segment is required when using a character set other than level A.
UNA:+.? '

5. Segments Layout

Segment number: 2

UNB - M 1 - Interchange header					
Function: To start, identify and specify an interchange.					
		EDIFACT	GS1	*	Description
S001	SYNTAX IDENTIFIER	M	**M**		See Part I chapter 5.2.7 and segment notes.
0001	Syntax identifier	M a4	**M**	*	UNOA = UN/ECE level A UNOB = UN/ECE level B UNOC = UN/ECE level C UNOD = UN/ECE level D UNOE = UN/ECE level E UNOF = UN/ECE level F
0002	Syntax version number	M n1	**M**	*	3 = Version 3
S002	INTERCHANGE SENDER	M	**M**		
0004	Sender identification	M an..35	**M**		GLN (n13)
0007	Partner identification code qualifier	C an..4	**R**	*	14 = GS1
0008	Address for reverse routing	C an..14	**O**		
S003	INTERCHANGE RECIPIENT	M	**M**		
0010	Recipient identification	M an..35	**M**		GLN (n13)
0007	Partner identification code qualifier	C an..4	**R**	*	14 = GS1
0014	Routing address	C an..14	**O**		
S004	DATE/TIME OF PREPARATION	M	**M**		
0017	Date of preparation	M n6	**M**		YYMMDD
0019	Time of preparation	M n4	**M**		HHMM
0020	Interchange control reference	M an..14	**M**		Unique reference identifying the interchange. Created by the interchange sender.
S005	RECIPIENT'S REFERENCE, PASSWORD	C	**O**		
0022	Recipient's reference/ password	M an..14	**M**		
0025	Recipient's reference/ password qualifier	C an2	**O**		
0026	Application reference	C an..14	**O**		Message identification if the interchange contains only one type of message.
0029	Processing priority code	C a1	**O**		A = Highest priority
0031	Acknowledgement request	C n1	**O**		1 = Requested
0032	Communications agreement ID	C an..35	**O**	*	EANCOM.....
0035	Test indicator	C n1	**O**		1 = Interchange is a test
Segment Notes: This segment is used to envelope the interchange, as well as to identify both, the party to whom the interchange is sent and the party who has sent the interchange. The principle of the UNB segment is the same as a physical envelope which covers one or more letters or documents, and which details, both the address where delivery is to take place and the address from where the envelope has come.					

5. Segments Layout

Segment number: 2

S001: The character encoding specified in basic code table of ISO/IEC 646 (7-bit coded character set for information interchange) shall be used for the interchange service string advice (if used) and up to and including the composite data element S001 'Syntax identifier' in the interchange header. The character repertoire used for the characters in an interchange shall be identified from the code value of data element 0001 in S001 'Syntax identifier' in the interchange header. The character repertoire identified does not apply to objects and/or encrypted data.
The default encoding technique for a particular repertoire shall be the encoding technique defined by its associated character set specification.
DE 0001: The recommended (default) character set for use in EANCOM® for international exchanges is character set A (UNOA). Should users wish to use character sets other than A, an agreement on which set to use should be reached on a bilateral basis before communications begin.
DE 0004, 0008, 0010, 0014, 0042 and 0046: Within EANCOM® the use of the Global Location Number (GLN) is recommended for the identification of the interchange sender and recipient.
DE 0008: Identification (e.g. a division) specified by the sender of the interchange, to be included if agreed, by the recipient in response interchanges, to facilitate internal routing.
DE 0042: Sub-level of sender internal identification, when further sub-level identification is required.
DE 0014: The address for routing, provided beforehand by the interchange recipient, is used by the interchange sender to inform the recipient of the internal address, within the latter's systems, to which the interchange should be routed. It is recommended that the GLN be used for this purpose.
DE 0007: Identification (e.g. a division) specified by the recipient of the interchange, to be included if agreed, by the sender in response interchanges, to facilitate internal routing.
DE 0046: Sub-level of recipient internal identification, when further sub-level identification is required.
DE S004: The date and time specified in this composite should be the date and time at which the interchange sender prepared the interchange. This date and time may not necessarily be the same as the date and time of contained messages.
DE 0020: The interchange control reference number is generated by the interchange sender and is used to identify uniquely each interchange. Should the interchange sender wish to re-use interchange control reference numbers, it is recommended that each number be preserved for at least a period of three months before being re-used. In order to guarantee uniqueness, the interchange control reference number should always be linked to the interchange sender's identification (DE 0004).
DE S005: The use of passwords must first be agreed bilaterally by the parties exchanging the interchange.
DE 0026: This data element is used to identify the application, on the interchange recipient's system, to which the interchange is directed. This data element may only be used if the interchange contains only one type of message, (e.g. only invoices). The reference used in this data element is assigned by the interchange sender.
DE 0031: This data element is used to indicate whether an acknowledgement to the interchange is required. The EANCOM® APERAK or CONTRL message should be used to provide acknowledgement of interchange receipt. In addition, the EANCOM® CONTRL message may be used to indicate when an interchange has been rejected due to syntax errors.
DE 0032: This data element is used to identify any underlying agreements which control the exchange of data. Within EANCOM® , the identity of such agreements must start with the letters 'EANCOM', the remaining characters within the data element being filled according to bilateral agreements.

```
UNB+UNOA:3+5412345678908:14+8798765432106:14+020102:1000+12345555+++++EANCOMREF 52'
```

5. Segments Layout

Segment number: 3

UNH - M 1 - Message header					
Function: To head, identify and specify a message.					
		EDIFACT	GS1	*	Description
0062	Message reference number	M an..14	**M**		Senders unique message reference. Sequence number of the messages in the interchange. DE 0062 in the UNT will be exactly the same. Sender generated.
S009	MESSAGE IDENTIFIER	M	**M**		
0065	Message type	M an..6	**M**	*	REMADV = Remittance advice message
0052	Message version number	M an..3	**M**	*	D = Draft version/UN/EDIFACT Directory
0054	Message release number	M an..3	**M**	*	01B = Release 2001 - B
0051	Controlling agency	M an..2	**M**	*	UN = UN/CEFACT
0057	Association assigned code	C an..6	**R**	*	EAN005 = GS1 version control number (GS1 Permanent Code) Indicates that the message is the EANCOM version 005 of the Remittance Advice.
0068	Common access reference	C an..35	**N**		
S010	STATUS OF THE TRANSFER	C	**N**		
0070	Sequence of transfers	M n..2			
0073	First and last transfer	C a1			
Segment Notes: This segment is used to head, identify and specify a message. DE's 0065, 0052, 0054, and 0051: Indicate that the message is a UNSM Remittance Advice based on the D.01B directory under the control of the United Nations. Example: UNH+ME000001+REMADV:D:01B:UN:EAN005'					

5. Segments Layout

Segment number: 4

BGM	- M	1 - Beginning of message			
Function: To indicate the type and function of a message and to transmit the identifying number.					
		EDIFACT	GS1	*	Description
C002	DOCUMENT/MESSAGE NAME	C	**R**		
1001	Document name code	C an..3	**R**	*	481 = Remittance advice
1131	Code list identification code	C an..17	**N**		
3055	Code list responsible agency code	C an..3	**N**		
1000	Document name	C an..35	**O**		
C106	DOCUMENT/MESSAGE IDENTIFICATION	C	**R**		
1004	Document identifier	C an..35	**R**		Remittance Advice number assigned by the document initiator. For global unique identification of documents Global Document Type Identifier (GDTI) is available.
1056	Version identifier	C an..9	**N**		
1060	Revision identifier	C an..6	**N**		
1225	Message function code	C an..3	**R**	*	5 = Replace 9 = Original 31 = Copy The message function coded, is a critical data element in this segment. It applies to all data indicated in the message. The following definitions apply for the restricted codes: 5 = Replace - This code indicates that the current remittance advice message is a replacement due to an error in a previous message. The previous message should be identified in the RFF segment group 1. 9 = Original - An original transmission of a Remittance Advice.
4343	Response type code	C an..3	**N**		
Segment Notes: This segment is used to indicate the type and function of a message and to transmit its identifying number. All references other than the document number DE 1004 are in the RFF segment. Example: BGM+481+RA78305+9'					

5. Segments Layout

Segment number: 5

DTM - M 5 - Date/time/period					
Function: To specify date, and/or time, or period.					
		EDIFACT	GS1	*	Description
C507	DATE/TIME/PERIOD	M	**M**		
2005	Date or time or period function code qualifier	M an..3	**M**	*	15 = Promotion start date/time 16 = Promotion end date/time 137 = Document/message date/time 138 = Payment date 203 = Execution date/time, requested 227 = Beneficiary's banks due date 263 = Invoicing period Code value '203' is used to indicate to the payee the date on which the payer has requested its bank to execute the payment.
2380	Date or time or period value	C an..35	**R**		
2379	Date or time or period format code	C an..3	**R**		102 = CCYYMMDD 203 = CCYYMMDDHHMM

Segment Notes:

This segment is used to specify dates related to the complete remittance advice message.
DE 2005: Identification of the 'Document/message date/time' (code value 137) is mandatory in an EANCOM message.

Example:
DTM+137:20020110:102'
DTM+138:200201081245:203'

5. Segments Layout

Segment number: 6

RFF	- C	5 - Reference			
Function: To specify a reference.					
		EDIFACT	GS1	*	Description
C506	REFERENCE	M	**M**		
1153	Reference code qualifier	M an..3	**M**		AEK = Payment order number AES = Primary reference AFO = Beneficiary's reference CT = Contract number FC = Fiscal number GN = Government reference number VA = VAT registration number RA = Remittance advice number
1154	Reference identifier	C an..70	**R**		
1156	Document line identifier	C an..6	**N**		
4000	Reference version identifier	C an..35	**N**		
1060	Revision identifier	C an..6	**N**		

Segment Notes:

This segment is used to specify any references which relate to the complete remittance advice.
References only applying to the complete Remittance Advice should be given at this point. References to a specific commercial document/message, e.g., Invoice, Purchase Order or Despatch Advice are provided in the RFF segment of the detail section per document/message identified in the DOC segment.

Example:
RFF+CT:54223'

5. Segments Layout

Segment number: 7

FII	- C	5 - Financial institution information			
Function: To identify an account and a related financial institution.					
		EDIFACT	GS1	*	Description
3035	Party function code qualifier	M an..3	**M**		PB = Paying financial institution RB = Receiving financial institution
C078	ACCOUNT HOLDER IDENTIFICATION	C	**R**		
3194	Account holder identifier	C an..35	**R**		
3192	Account holder name	C an..35	**O**		
3192	Account holder name	C an..35	**O**		
6345	Currency identification code	C an..3	**O**		ISO 4217 three alpha code
C088	INSTITUTION IDENTIFICATION	C	**O**		
3433	Institution name code	C an..11	**O**		
1131	Code list identification code	C an..17	**O**		25 = Bank identification
3055	Code list responsible agency code	C an..3	**D**		5 = ISO (International Organization for Standardization)
3434	Institution branch identifier	C an..17	**O**		
1131	Code list identification code	C an..17	**O**		25 = Bank identification
3055	Code list responsible agency code	C an..3	**D**		5 = ISO (International Organization for Standardization)
3432	Institution name	C an..70	**O**		
3436	Institution branch location name	C an..70	**O**		
3207	Country name code	C an..3	**O**		ISO 3166 two alpha code

Segment Notes:

This segment is used to identify financial institution information related to the parties involved in the Remittance Advice.

Example:
FII+RB+994-3277711:NGEISS+KREDBEBB:25:5'

5. Segments Layout

Segment number: 8

PAI	- C	1 - Payment instructions			
Function: To specify the instructions for payment.					
		EDIFACT	GS1	*	Description
C534	PAYMENT INSTRUCTION DETAILS	M	**M**		
4439	Payment conditions code	C an..3	**O**		1 = Direct payment
4431	Payment guarantee means code	C an..3	**O**		20 = Goods as security
4461	Payment means code	C an..3	**O**		42 = Payment to bank account 56 = Bankgiro
1131	Code list identification code	C an..17	**O**		
3055	Code list responsible agency code	C an..3	**D**		
4435	Payment channel code	C an..3	**O**		1 = Ordinary post

Segment Notes:

This segment is used by the sender of the Remittance Advice to indicate how payment is being made.

Example:
PAI+1::42'

5. Segments Layout

Segment number: 9

SG1	- C	99 -	NAD-SG3
NAD	- M	1 -	Name and address

Function:

To specify the name/address and their related function, either by C082 only and/or unstructured by C058 or structured by C080 thru 3207.

		EDIFACT	GS1	*	Description
3035	Party function code qualifier	M an..3	**M**		AB = Buyer's agent/representative BY = Buyer DP = Delivery party PE = Payee PR = Payer SU = Supplier
C082	PARTY IDENTIFICATION DETAILS	C	**A**		
3039	Party identifier	M an..35	**M**		For identification of parties it is recommended to use GLN - Format n13.
1131	Code list identification code	C an..17	**N**		
3055	Code list responsible agency code	C an..3	**R**	*	9 = GS1 X5 = IT, Ufficio IVA (GS1 Temporary Code)
C058	NAME AND ADDRESS	C	**O**		This composite may only be used to fulfill the requirements of directive 2003/58/EC, article 4.
3124	Name and address description	M an..35	**M**		
3124	Name and address description	C an..35	**O**		
3124	Name and address description	C an..35	**O**		
3124	Name and address description	C an..35	**O**		
3124	Name and address description	C an..35	**O**		
C080	PARTY NAME	C	**D**		
3036	Party name	M an..35	**M**		Party Name in clear text.
3036	Party name	C an..35	**O**		
3036	Party name	C an..35	**O**		
3036	Party name	C an..35	**O**		
3036	Party name	C an..35	**O**		
3045	Party name format code	C an..3	**O**		
C059	STREET	C	**D**		
3042	Street and number or post office box identifier	M an..35	**M**		Building Name/Number and Street Name and/or P.O. Box.
3042	Street and number or post office box identifier	C an..35	**O**		
3042	Street and number or post office box identifier	C an..35	**O**		
3042	Street and number or post office box identifier	C an..35	**O**		
3164	City name	C an..35	**D**		City/Town name, clear text
C819	COUNTRY SUB-ENTITY DETAILS	C	**D**		
3229	Country sub-entity name code	C an..9	**O**		

5. Segments Layout

Segment number: 9

		EDIFACT	GS1	*	Description
1131	Code list identification code	C an..17	**O**		
3055	Code list responsible agency code	C an..3	**O**		
3228	Country sub-entity name	C an..70	**O**		County/State, clear text.
3251	Postal identification code	C an..17	**D**		Postal Code
3207	Country name code	C an..3	**D**		ISO 3166 two alpha code

Segment Notes:

This segment is used to identify the parties exchanging the Remittance Advice message, and if necessary, any associated parties. The identification of the payer and payee, and buyer and seller if different from the payer and payee, are mandatory in the Remittance Advice message.

Example:
NAD+PR+5456789000017::9'
NAD+PE+3323456007896::9'

Dependency Notes:
The following composites and data elements are only used when a coded name and address can not be used.
The affected composites and data elements are as follows:
C080 - C059 - 3164 - C819 - 3251 - 3207

5. Segments Layout

Segment number: 10

SG1	- C	99 -	NAD-SG3
SG3	- C	5 -	CTA-COM
CTA	- M	1 -	Contact information

Function:

To identify a person or a department to whom communication should be directed.

		EDIFACT	GS1	*	Description
3139	Contact function code	C an..3	**R**		AD = Accounting contact AP = Accounts payable contact AR = Accounts receivable contact CR = Customer relations PD = Purchasing contact
C056	DEPARTMENT OR EMPLOYEE DETAILS	C	**O**		
3413	Department or employee name code	C an..17	**O**		
3412	Department or employee name	C an..35	**O**		

Segment Notes:

This segment is used to identify contact names or departments within the party specified in the NAD segment.

Example:
CTA+AD+:Y TEALL'

5. Segments Layout

Segment number: 11

SG1	- C	99	-	NAD-SG3
SG3	- C	5	-	CTA-COM
COM	- C	5	-	Communication contact

Function:

To identify a communication number of a department or a person to whom communication should be directed.

		EDIFACT	GS1	*	Description
C076	COMMUNICATION CONTACT	M	**M**		
3148	Communication address identifier	M an..512	**M**		
3155	Communication address code qualifier	M an..3	**M**		AO = Uniform Resource Location (URL) EM = Electronic mail TE = Telephone

Segment Notes:

This segment identifies the communications number, and type of communications, for the person and/or department identified in the preceding CTA segment.

Example:
COM+0032025142663:FX'

5. Segments Layout

Segment number: 12

SG4	- C	5 -	CUX-DTM
CUX	- M	1 -	Currencies

Function:

To specify currencies used in the transaction and relevant details for the rate of exchange.

		EDIFACT	GS1	*	Description
C504	CURRENCY DETAILS	C	**R**		
6347	Currency usage code qualifier	M an..3	**M**	*	2 = Reference currency
6345	Currency identification code	C an..3	**R**		ISO 4217 three alpha code
6343	Currency type code qualifier	C an..3	**R**	*	11 = Payment currency
6348	Currency rate value	C n..4	**N**		
C504	CURRENCY DETAILS	C	**D**		The second occurrence of this composite is only used if a target currency is being specified.
6347	Currency usage code qualifier	M an..3	**M**	*	3 = Target currency
6345	Currency identification code	C an..3	**R**		ISO 4217 three alpha code
6343	Currency type code qualifier	C an..3	**R**		4 = Invoicing currency 8 = Price list currency 9 = Order currency 12 = Quotation currency
6348	Currency rate value	C n..4	**N**		
5402	Currency exchange rate	C n..12	**D**		The rate of exchange is only used if a target currency has been identified in the second occurrence of C504.
6341	Exchange rate currency market identifier	C an..3	**N**		

Segment Notes:

This segment is used to indicate currency information related to the complete remittance advice. The CUX segment may be omitted for national exchanges. The CUX segment is mandatory for international exchanges.
A remittance advice will refer to ONLY ONE payment currency.
The CUX segment may be used also to indicate other currencies specified previously in the transaction, such as pricing currency, invoicing currency, etc.
When specifying Reference and Target Currencies for international trade, one occurrence of CUX is all that is required. The reference currency is identified in the first occurrence of composite C504, with the target currency specified in the second occurrence of C504, The rate of exchange between the two is detailed in DE 5402.
The general rule for calculating rate of exchange is as follows:
Reference Currency multiplied by Rate = Target Currency.

Example:
CUX+2:EUR:11'

CUX+2:EUR:11+3:USD:4+0.98'

5. Segments Layout

Segment number: 13

SG4	- C	5 -	CUX-DTM
DTM	- C	1 -	Date/time/period

Function:

To specify date, and/or time, or period.

		EDIFACT	GS1	*	Description
C507	DATE/TIME/PERIOD	M	**M**		
2005	Date or time or period function code qualifier	M an..3	**M**	*	134 = Rate of exchange date/time
2380	Date or time or period value	C an..35	**R**		
2379	Date or time or period format code	C an..3	**R**		102 = CCYYMMDD 203 = CCYYMMDDHHMM

Segment Notes:

This segment is used to indicate the date on which a rate of exchange was quoted.

Example:
DTM+134:20021220:102'

5. Segments Layout

Segment number: 14

SG5	- C	999999	-	DOC-MOA-DTM-RFF-NAD-SG6-SG7-SG10
DOC	- M	1	-	Document/message details

Function:

To identify documents and details directly related to it.

		EDIFACT	GS1	*	Description
C002	DOCUMENT/MESSAGE NAME	M	**M**		
1001	Document name code	C an..3	**D**		82 = Metered services invoice 83 = Credit note related to financial adjustments 84 = Debit note related to financial adjustments 380 = Commercial invoice 381 = Credit note - goods and services 383 = Debit note - goods and services If a remittance advice relates to a payment with no reference to a previous document/commercial transaction then DE 1001 is not used and DE 1000 is used to provide a dummy document name and DE 1004 used to provide a reference number or dummy document number.
1131	Code list identification code	C an..17	**O**		
3055	Code list responsible agency code	C an..3	**D**		
1000	Document name	C an..35	**O**		
C503	DOCUMENT/MESSAGE DETAILS	C	**O**		
1004	Document identifier	C an..35	**R**		
1373	Document status code	C an..3	**O**		4 = To arrive by separate EDI message 5 = Information only 6 = To arrive by manual means 7 = To be raised and sent
1366	Document source description	C an..70	**O**		
3453	Language name code	C an..3	**O**		ISO 639 two alpha
1056	Version identifier	C an..9	**N**		
1060	Revision identifier	C an..6	**N**		
3153	Communication medium type code	C an..3	**O**		
1220	Document copies required quantity	C n..2	**O**		
1218	Document originals required quantity	C n..2	**O**		

Segment Notes:

This segment is used to provide details of the documents, e.g., a group of invoices, to which the Remittance Advice refers. The detail section of the Remittance Advice is formed by a repeating groups of DOC segments. Individual document line item information is provided in the DLI segment.

Example:
DOC+380+458011'

5. Segments Layout

Segment number: 15

SG5	- C	999999	-	DOC-MOA-DTM-RFF-NAD-SG6-SG7-SG10
MOA	- M	5	-	Monetary amount

Function:

To specify a monetary amount.

		EDIFACT	GS1	*	Description
C516	MONETARY AMOUNT	M	**M**		
5025	Monetary amount type code qualifier	M an..3	**M**		7 = Agreed charge 9 = Amount due/amount payable 12 = Amount remitted 13 = Amount subject to total monetary discount 23 = Charge amount 39 = Invoice total amount 52 = Discount amount 124 = Tax amount 134 = Total declared
5004	Monetary amount	C n..35	**R**		
6345	Currency identification code	C an..3	**D**		ISO 4217 three alpha code For DE 5025 value 12, amount remitted, the currency is implicitly the same as the payment currency identified in the CUX segment at heading level. In this case DE 6345 is not used. For the other coded values the currency will refer to the currency of the original line item. DE 6345 is required in these cases.
6343	Currency type code qualifier	C an..3	**N**		
4405	Status description code	C an..3	**N**		

Segment Notes:

This segment is used to provide monetary amounts related to the document specified in the previous DOC segment.
The specification of the amount due and amount remitted relevant to the particular document identified in the DOC segment is mandatory.

Example:
MOA+12:75000'

5. Segments Layout

Segment number: 16

SG5	- C	999999	-	DOC-MOA-DTM-RFF-NAD-SG6-SG7-SG10
DTM	- C	5	-	Date/time/period

Function:

To specify date, and/or time, or period.

		EDIFACT	GS1	*	Description
C507	DATE/TIME/PERIOD	M	**M**		
2005	Date or time or period function code qualifier	M an..3	**M**	*	15 = Promotion start date/time 137 = Document/message date/time 140 = Payment due date 179 = Booking date/time 265 = Due date 321 = Promotion date/period
2380	Date or time or period value	C an..35	**R**		
2379	Date or time or period format code	C an..3	**R**		102 = CCYYMMDD 203 = CCYYMMDDHHMM

Segment Notes:

This segment is used to indicate the date of the document identified in the DOC segment.

Example:
DTM+137:20021215:102'

5. Segments Layout

Segment number: 17

SG5	- C	999999	-	DOC-MOA-DTM-RFF-NAD-SG6-SG7-SG10
RFF	- C	5	-	Reference

Function:

To specify a reference.

		EDIFACT	GS1	*	Description
C506	REFERENCE	M	**M**		
1153	Reference code qualifier	M an..3	**M**		AAK = Despatch advice number BO = Blanket order number CED = Debit Letter number COF = Call off order number CT = Contract number IP = Import licence number ON = Order number (buyer) PL = Price list number POR = Purchase order response number PP = Purchase order change number VN = Order number (supplier)
1154	Reference identifier	C an..70	**R**		
1156	Document line identifier	C an..6	**N**		
4000	Reference version identifier	C an..35	**N**		
1060	Revision identifier	C an..6	**N**		

Segment Notes:

This segment is used to provide references related to the document identified in the DOC segment.

Example:
RFF+CT:78321'

5. Segments Layout

Segment number: 18

SG5	- C	999999	-	DOC-MOA-DTM-RFF-NAD-SG6-SG7-SG10
NAD	- C	2	-	Name and address

Function:

To specify the name/address and their related function, either by C082 only and/or unstructured by C058 or structured by C080 thru 3207.

		EDIFACT	GS1	*	Description
3035	Party function code qualifier	M an..3	**M**	*	BY = Buyer DP = Delivery party PE = Payee SU = Supplier
C082	PARTY IDENTIFICATION DETAILS	C	**A**		
3039	Party identifier	M an..35	**M**		For identification of parties it is recommended to use GLN - Format n13.
1131	Code list identification code	C an..17	**N**		
3055	Code list responsible agency code	C an..3	**R**	*	9 = GS1 X5 = IT, Ufficio IVA (GS1 Temporary Code)
C058	NAME AND ADDRESS	C	**O**		This composite may only be used to fulfill the requirements of directive 2003/58/EC, article 4.
3124	Name and address description	M an..35	**M**		
3124	Name and address description	C an..35	**O**		
3124	Name and address description	C an..35	**O**		
3124	Name and address description	C an..35	**O**		
3124	Name and address description	C an..35	**O**		
C080	PARTY NAME	C	**D**		
3036	Party name	M an..35	**M**		Party name in clear text.
3036	Party name	C an..35	**O**		
3036	Party name	C an..35	**O**		
3036	Party name	C an..35	**O**		
3036	Party name	C an..35	**O**		
3045	Party name format code	C an..3	**O**		
C059	STREET	C	**D**		
3042	Street and number or post office box identifier	M an..35	**M**		Building name/Number and Street Name and/or P.O. Box.
3042	Street and number or post office box identifier	C an..35	**O**		
3042	Street and number or post office box identifier	C an..35	**O**		
3042	Street and number or post office box identifier	C an..35	**O**		
3164	City name	C an..35	**D**		City/Town name, clear text
C819	COUNTRY SUB-ENTITY DETAILS	C	**D**		
3229	Country sub-entity name code	C an..9	**O**		
1131	Code list identification code	C an..17	**O**		

5. Segments Layout

Segment number: 18

		EDIFACT	GS1	*	Description
3055	Code list responsible agency code	C an..3	**O**		
3228	Country sub-entity name	C an..70	**O**		County/State, clear text.
3251	Postal identification code	C an..17	**D**		Postal code
3207	Country name code	C an..3	**D**		ISO 3166 two alpha code

Segment Notes:

This segment is used to identify the buyer or delivery party when different to the buyer, for the current document.

Example:
NAD+BY+5456789000010::9'

Dependency Notes:
The following composites and data elements are only used when a coded name and address can not be used.
The affected composites and data elements are as follows:
C080 - C059 - 3164 - C819 - 3251 - 3207

5. Segments Layout

Segment number: 19

SG5	- C	999999	-	DOC-MOA-DTM-RFF-NAD-SG6-SG7-SG10
SG6	- C	5	-	CUX-DTM
CUX	- M	1	-	Currencies

Function:

To specify currencies used in the transaction and relevant details for the rate of exchange.

		EDIFACT	GS1	*	Description
C504	CURRENCY DETAILS	C	**R**		
6347	Currency usage code qualifier	M an..3	**M**	*	2 = Reference currency
6345	Currency identification code	C an..3	**R**		ISO 4217 three alpha code
6343	Currency type code qualifier	C an..3	**R**	*	11 = Payment currency
6348	Currency rate value	C n..4	**N**		
C504	CURRENCY DETAILS	C	**D**		The second occurrence of this composite is only used if a target currency is being specified.
6347	Currency usage code qualifier	M an..3	**M**	*	3 = Target currency
6345	Currency identification code	C an..3	**R**		ISO 4217 three alpha code
6343	Currency type code qualifier	C an..3	**R**		4 = Invoicing currency 8 = Price list currency 9 = Order currency 12 = Quotation currency
6348	Currency rate value	C n..4	**N**		
5402	Currency exchange rate	C n..12	**D**		The rate of exchange is only used if a target currency has been identified in the second occurrence of C504.
6341	Exchange rate currency market identifier	C an..3	**N**		

Segment Notes:

This segment is used to provide currency rate of exchange information used to convert amounts specified in the MOA segment for the referenced document, to an amount expressed in terms of the remittance/payment currency. This CUX segment will only be used when the currency or its rate of exchange is different from the default global currency or its rate of exchange specified in the CUX segment at heading level.
When specifying Reference and Target Currencies for international trade, one occurrence of CUX is all that is required. The reference currency is identified in the first occurrence of composite C504, with the target currency specified in the second occurrence of C504, The rate of exchange between the two is detailed in DE 5402.
The general rule for calculating rate of exchange is as follows:
Reference Currency multiplied by Rate = Target Currency.

Example:
CUX+2:EUR:11+3:USD:4+0.90243'

5. Segments Layout

Segment number: 20

SG5	- C	999999	-	DOC-MOA-DTM-RFF-NAD-SG6-SG7-SG10
SG6	- C	5	-	CUX-DTM
DTM	- C	1	-	Date/time/period

Function:

To specify date, and/or time, or period.

		EDIFACT	GS1	*	Description
C507	DATE/TIME/PERIOD	M	**M**		
2005	Date or time or period function code qualifier	M an..3	**M**	*	134 = Rate of exchange date/time
2380	Date or time or period value	C an..35	**R**		
2379	Date or time or period format code	C an..3	**R**		102 = CCYYMMDD 203 = CCYYMMDDHHMM

Segment Notes:

This segment is used to specify the date on which the rate of exchange was quoted.

Example:
DTM+134:20021201:102'

5. Segments Layout

Segment number: 21

SG5	- C	999999	-	DOC-MOA-DTM-RFF-NAD-SG6-SG7-SG10
SG7	- C	100	-	AJT-MOA-RFF-FTX-QTY-SG8
AJT	- M	1	-	Adjustment details

Function:

To identify the reason for an adjustment.

		EDIFACT	GS1	*	Description
4465	Adjustment reason description code	M an..3	**M**		1 = Agreed settlement 3 = Damaged goods 4 = Short delivery 5 = Price query 9 = Invoice error 40 = Deducted freight costs 66 = Cash discount 74 = Quantity discount 75 = Promotion discount 77 = Pricing discount 79 = Sundry discount 90 = Treasury management service charge ZZZ = Mutually defined If adjustments are made due to national tax practices then code values to identify these national practices may be allocated for use with this data element by industrial GS1 Member Organisations.
1082	Line item identifier	C an..6	**N**		

Segment Notes:

This segment is used to indicate the reason for an adjustment to the current document.
Adjustments can be given for the referenced document identified in the DOC segment and additionally, can be given per line item in the AJT segment in the following DLI segment group.
DE 1082: If specific references or information to a line item number in a document are required, then the line item number is given in the DLI segment and the adjustment given in the AJT segment, both in segment group 10.

Example:
AJT+4'

5. Segments Layout

Segment number: 22

SG5	- C	999999	-	DOC-MOA-DTM-RFF-NAD-SG6-SG7-SG10
SG7	- C	100	-	AJT-MOA-RFF-FTX-QTY-SG8
MOA	- C	1	-	Monetary amount

Function:

To specify a monetary amount.

		EDIFACT	GS1	*	Description
C516	MONETARY AMOUNT	M	**M**		
5025	Monetary amount type code qualifier	M an..3	**M**	*	5 = Adjusted amount 77 = Invoice amount 124 = Tax amount 125 = Taxable amount 165 = Adjustment amount 265 = Commission amount
5004	Monetary amount	C n..35	**R**		
6345	Currency identification code	C an..3	**N**		
6343	Currency type code qualifier	C an..3	**N**		
4405	Status description code	C an..3	**N**		

Segment Notes:

This segment is used to indicate the value of the adjustment amount.
Adjustment amounts can be given for information purposes only, i.e., not for calculation. The adjustment amount will not necessarily equal the difference between the amount due and the amount remitted.
The adjustment amount will always be expressed in terms of the remittance/payment currency.
Please note that negative adjustment must be explicily indicated by the minus (-) sign.

Example:
MOA+5:5300'

5. Segments Layout

Segment number: 23

SG5	- C	999999	-	DOC-MOA-DTM-RFF-NAD-SG6-SG7-SG10
SG7	- C	100	-	AJT-MOA-RFF-FTX-QTY-SG8
RFF	- C	1	-	Reference

Function:

To specify a reference.

		EDIFACT	GS1	*	Description
C506	REFERENCE	M	**M**		
1153	Reference code qualifier	M an..3	**M**		ON = Order number (buyer) PL = Price list number PP = Purchase order change number POR = Purchase order response number VN = Order number (supplier)
1154	Reference identifier	C an..70	**R**		
1156	Document line identifier	C an..6	**N**		
4000	Reference version identifier	C an..35	**N**		
1060	Revision identifier	C an..6	**N**		

Segment Notes:

This segment is used to specify any references associated to the adjustment amounts.
If specific references or information related to a line item number in a document are required then this information is provided in the AJT segment group (group12) contained in segment group 10.

Example:
RFF+PL:NOV199302'

5. Segments Layout

Segment number: 24

SG5	- C	999999	-	DOC-MOA-DTM-RFF-NAD-SG6-SG7-SG10
SG7	- C	100	-	AJT-MOA-RFF-FTX-QTY-SG8
FTX	- C	5	-	Free text

Function:

To provide free form or coded text information.

		EDIFACT	GS1	*	Description
4451	Text subject code qualifier	M an..3	**M**		ABU = Deferred payment termed additional ACB = Additional information ACF = Additional attribute information ADK = Promotion information PUR = Purchasing information
4453	Free text function code	C an..3	**O**	*	1 = Text for subsequent use
C107	TEXT REFERENCE	C	**D**		This composite is only used when trading partners have agreed to use mutually defined code values.
4441	Free text value code	M an..17	**M**		001 = Reference to standard text between trading partners.
1131	Code list identification code	C an..17	**O**		
3055	Code list responsible agency code	C an..3	**D**		91 = Assigned by supplier or supplier's agent 92 = Assigned by buyer or buyer's agent
C108	TEXT LITERAL	C	**D**		This composite is only used if coded text can not be used.
4440	Free text value	M an..512	**M**		
4440	Free text value	C an..512	**O**		
4440	Free text value	C an..512	**O**		
4440	Free text value	C an..512	**O**		
4440	Free text value	C an..512	**O**		
3453	Language name code	C an..3	**D**		ISO 639 two alpha code This data element is only used when non coded free text has been provided in data element C108.
4447	Free text format code	C an..3	**N**		

Segment Notes:

This segment is used to provide free form or coded text information which applies to the complete remittance advice message.
This segment is used to provide free form or coded text information which applies to the current line item.
Use of this segment in free form is not recommended since in most cases it inhibits automatic processing of the remittance advice. Coded references to standard texts is an available functionality which enables automatic processing and reduces transmission and processing overheads. Standard texts should be mutually defined among trading partners and can be used to cover legal and other requirements.

Example:
FTX+PUR+1+001::91'
(E.g. Purchasing information standard text code 001 = Please note adjusted payment terms)

5. Segments Layout

Segment number: 25

SG5	- C	999999	-	DOC-MOA-DTM-RFF-NAD-SG6-SG7-SG10
SG7	- C	100	-	AJT-MOA-RFF-FTX-QTY-SG8
QTY	- C	9	-	Quantity

Function:

To specify a pertinent quantity.

		EDIFACT	GS1	*	Description
C186	QUANTITY DETAILS	M	**M**		
6063	Quantity type code qualifier	M an..3	**M**	*	3 = Cumulative quantity 26 = Promotion quantity
6060	Quantity	M an..35	**M**		
6411	Measurement unit code	C an..3	**D**		This data element is only used if the current product is of variable quantity.

Segment Notes:

This segment is used to specify quantitative data, such as cumulative or promotional quantity across a payment period.

Example:
QTY+3:10000'

5. Segments Layout

Segment number: 26

SG5	- C	999999 -	DOC-MOA-DTM-RFF-NAD-SG6-SG7-SG10
SG7	- C	100 -	AJT-MOA-RFF-FTX-QTY-SG8
SG8	- C	9 -	TAX-MOA
TAX	- M	1 -	Duty/tax/fee details

Function:

To specify relevant duty/tax/fee information.

		EDIFACT	GS1	*	Description
5283	Duty or tax or fee function code qualifier	M an..3	**M**		5 = Customs duty 7 = Tax
C241	DUTY/TAX/FEE TYPE	C	**D**		
5153	Duty or tax or fee type name code	C an..3	**O**		GST = Goods and services tax VAT = Value added tax
1131	Code list identification code	C an..17	**O**		
3055	Code list responsible agency code	C an..3	**D**		
5152	Duty or tax or fee type name	C an..35	**O**		
C533	DUTY/TAX/FEE ACCOUNT DETAIL	C	**O**		
5289	Duty or tax or fee account code	M an..6	**M**		
1131	Code list identification code	C an..17	**O**		
3055	Code list responsible agency code	C an..3	**D**		
5286	Duty or tax or fee assessment basis value	C an..15	**O**		
C243	DUTY/TAX/FEE DETAIL	C	**A**		
5279	Duty or tax or fee rate code	C an..7	**O**		
1131	Code list identification code	C an..17	**O**		
3055	Code list responsible agency code	C an..3	**D**		
5278	Duty or tax or fee rate	C an..17	**R**		The actual rate of tax/duty.
5273	Duty or tax or fee rate basis code	C an..12	**O**		
1131	Code list identification code	C an..17	**O**		
3055	Code list responsible agency code	C an..3	**D**		
5305	Duty or tax or fee category code	C an..3	**D**		A = Mixed tax rate E = Exempt from tax S = Standard rate
3446	Party tax identifier	C an..20	**O**		
1227	Calculation sequence code	C an..3	**N**		

Segment Notes:

This segment is used to signify whether the processing adjustments are subject to tax.

Example:
TAX+7+VAT+++:::21+S'

5. Segments Layout

Segment number: 26

Dependency Notes:
DE C241 and 5305: Tax types and categories will differ from country to country. They are to be defined by national guidelines.

5. Segments Layout

Segment number: 27

SG5	- C	999999	-	DOC-MOA-DTM-RFF-NAD-SG6-SG7-SG10
SG7	- C	100	-	AJT-MOA-RFF-FTX-QTY-SG8
SG8	- C	9	-	TAX-MOA
MOA	- C	9	-	Monetary amount

Function:

To specify a monetary amount.

		EDIFACT	GS1	*	Description
C516	MONETARY AMOUNT	M	**M**		
5025	Monetary amount type code qualifier	M an..3	**M**		124 = Tax amount 125 = Taxable amount
5004	Monetary amount	C n..35	**R**		
6345	Currency identification code	C an..3	**N**		
6343	Currency type code qualifier	C an..3	**N**		
4405	Status description code	C an..3	**N**		

Segment Notes:

This segment is used to specify in monetary terms the amount of tax due on the current document.

Example:
MOA+124:21.80'

5. Segments Layout

Segment number: 28

SG5	- C	999999	-	DOC-MOA-DTM-RFF-NAD-SG6-SG7-SG10
SG10	- C	9999	-	DLI-MOA-PIA-SG11-SG12
DLI	- M	1	-	Document line identification

Function:

To specify the processing mode of a specific line within a referenced document.

		EDIFACT	GS1	*	Description
1073	Document line action code	M an..3	**M**		1 = Included in document/transaction 2 = Excluded from document/transaction
1082	Line item identifier	M an..6	**M**		

Segment Notes:

This segment is used to identify individual line items within the document identified in the DOC segment.

Example:
DLI+2+7'

5. Segments Layout

Segment number: 29

SG5	- C	999999	-	DOC-MOA-DTM-RFF-NAD-SG6-SG7-SG10
SG10	- C	9999	-	DLI-MOA-PIA-SG11-SG12
MOA	- C	5	-	Monetary amount

Function:

To specify a monetary amount.

		EDIFACT	GS1	*	Description
C516	MONETARY AMOUNT	M	**M**		
5025	Monetary amount type code qualifier	M an..3	**M**		12 = Amount remitted 23 = Charge amount 38 = Invoice item amount 52 = Discount amount 124 = Tax amount
5004	Monetary amount	C n..35	**R**		
6345	Currency identification code	C an..3	**D**		For DE 5025 value 12, amount remitted, the currency is implicitly the same as the payment currency identified in the CUX segment at heading level. In this case DE 6345 is not used. For the other coded values the currency will refer to the currency of the original line item. DE 6345 is required in these cases.
6343	Currency type code qualifier	C an..3	**N**		
4405	Status description code	C an..3	**N**		

Segment Notes:

This segment is used to indicate monetary amounts related to the line item identified in the DLI segment.

Example:
MOA+12:45000'
MOA+38:65000'

5. Segments Layout

Segment number: 30

SG5	- C	999999	-	DOC-MOA-DTM-RFF-NAD-SG6-SG7-SG10
SG10	- C	9999	-	DLI-MOA-PIA-SG11-SG12
PIA	- C	5	-	Additional product id

Function:

To specify additional or substitutional item identification codes.

		EDIFACT	GS1	*	Description
4347	Product identifier code qualifier	M an..3	**M**	*	5 = Product identification
C212	ITEM NUMBER IDENTIFICATION	M	**M**		
7140	Item identifier	C an..35	**R**		
7143	Item type identification code	C an..3	**R**	*	AC = HIBC (Health Industry Bar Code) IN = Buyer's item number IS = ISSN (International Standard Serial Number) SA = Supplier's article number SRV = GS1 Global Trade Item Number
1131	Code list identification code	C an..17	**N**		
3055	Code list responsible agency code	C an..3	**O**		9 = GS1 91 = Assigned by supplier or supplier's agent 92 = Assigned by buyer or buyer's agent
C212	ITEM NUMBER IDENTIFICATION	C	**O**		
7140	Item identifier	C an..35	**R**		
7143	Item type identification code	C an..3	**R**		
1131	Code list identification code	C an..17	**O**		
3055	Code list responsible agency code	C an..3	**D**		
C212	ITEM NUMBER IDENTIFICATION	C	**O**		
7140	Item identifier	C an..35	**R**		
7143	Item type identification code	C an..3	**R**		
1131	Code list identification code	C an..17	**O**		
3055	Code list responsible agency code	C an..3	**D**		
C212	ITEM NUMBER IDENTIFICATION	C	**O**		
7140	Item identifier	C an..35	**R**		
7143	Item type identification code	C an..3	**R**		
1131	Code list identification code	C an..17	**O**		
3055	Code list responsible agency code	C an..3	**D**		
C212	ITEM NUMBER IDENTIFICATION	C	**O**		
7140	Item identifier	C an..35	**R**		
7143	Item type identification code	C an..3	**R**		

5. Segments Layout

Segment number: 30

		EDIFACT	GS1	*	Description
1131	Code list identification code	C an..17	**O**		
3055	Code list responsible agency code	C an..3	**D**		

Segment Notes:

This segment is used to provide the product identification for the line item detailed in the DLI segment, for the current document.

Example:
PIA+5+3323456007803:SRV'

5. Segments Layout

Segment number: 31

SG5	- C	999999	-	DOC-MOA-DTM-RFF-NAD-SG6-SG7-SG10
SG10	- C	9999	-	DLI-MOA-PIA-SG11-SG12
SG11	- C	5	-	CUX-DTM
CUX	- M	1	-	Currencies

Function:

To specify currencies used in the transaction and relevant details for the rate of exchange.

		EDIFACT	GS1	*	Description
C504	CURRENCY DETAILS	C	**R**		
6347	Currency usage code qualifier	M an..3	**M**	*	2 = Reference currency
6345	Currency identification code	C an..3	**R**		ISO 4217 three alpha code
6343	Currency type code qualifier	C an..3	**R**	*	11 = Payment currency
6348	Currency rate value	C n..4	**N**		
C504	CURRENCY DETAILS	C	**D**		The second occurrence of this composite is only used if a target currency is being specified.
6347	Currency usage code qualifier	M an..3	**M**	*	3 = Target currency
6345	Currency identification code	C an..3	**R**		ISO 4217 three alpha code
6343	Currency type code qualifier	C an..3	**R**		4 = Invoicing currency 8 = Price list currency 9 = Order currency 12 = Quotation currency
6348	Currency rate value	C n..4	**N**		
5402	Currency exchange rate	C n..12	**D**		The rate of exchange is only used if a target currency has been identified in the second occurrence of C504.
6341	Exchange rate currency market identifier	C an..3	**N**		

Segment Notes:

This segment is used to provide currency rate of exchange information to convert monetary amounts in the MOA segment, following the DLI segment, to an amount expressed in terms of the remittance/payment currency. This CUX segment will only be used when the currency or its rate of exchange is different for the line item to that expressed as a default currency in the CUX segment at DOC level.
When specifying Reference and Target Currencies for international trade, one occurrence of CUX is all that is required. The reference currency is identified in the first occurrence of composite C504, with the target currency specified in the second occurrence of C504. The rate of exchange between the two is detailed in DE 5402.
The general rule for calculating rate of exchange is as follows:
Reference Currency multiplied by Rate = Target Currency.

Example:
CUX+2:EUR:11+3:USD:4+0.90243'

5. Segments Layout

Segment number: 32

SG5	- C	999999	-	DOC-MOA-DTM-RFF-NAD-SG6-SG7-SG10
SG10	- C	9999	-	DLI-MOA-PIA-SG11-SG12
SG11	- C	5	-	CUX-DTM
DTM	- C	1	-	Date/time/period

Function:

To specify date, and/or time, or period.

		EDIFACT	GS1	*	Description
C507	DATE/TIME/PERIOD	M	**M**		
2005	Date or time or period function code qualifier	M an..3	**M**	*	134 = Rate of exchange date/time
2380	Date or time or period value	C an..35	**R**		
2379	Date or time or period format code	C an..3	**R**		102 = CCYYMMDD 203 = CCYYMMDDHHMM

Segment Notes:

This segment is used to specify the date on which the rate of exchange was quoted.

Example:
DTM+134:20021201:102'

5. Segments Layout

Segment number: 33

SG5	- C	999999	-	DOC-MOA-DTM-RFF-NAD-SG6-SG7-SG10
SG10	- C	9999	-	DLI-MOA-PIA-SG11-SG12
SG12	- C	10	-	AJT-MOA-RFF-SG13
AJT	- M	1	-	Adjustment details

Function:

To identify the reason for an adjustment.

		EDIFACT	GS1	*	Description
4465	Adjustment reason description code	M an..3	**M**		1 = Agreed settlement 3 = Damaged goods 4 = Short delivery 5 = Price query 9 = Invoice error ZZZ = Mutually defined If adjustments are made due to national tax practices then code values to identify these national practices may be allocated for use with this data element by individual Numbering Organisations.
1082	Line item identifier	C an..6	**N**		

Segment Notes:

This segment is used to indicate the reason for an adjustment to the current line identified in the DLI segment. The line item number of the line for which adjustments are being detailed is provided in DE 1082 of the DLI segment.

Example:
AJT+5'

5. Segments Layout

Segment number: 34

SG5	- C	999999	-	DOC-MOA-DTM-RFF-NAD-SG6-SG7-SG10
SG10	- C	9999	-	DLI-MOA-PIA-SG11-SG12
SG12	- C	10	-	AJT-MOA-RFF-SG13
MOA	- C	1	-	Monetary amount

Function:

To specify a monetary amount.

		EDIFACT	GS1	*	Description
C516	MONETARY AMOUNT	M	**M**		
5025	Monetary amount type code qualifier	M an..3	**M**	*	5 = Adjusted amount
5004	Monetary amount	C n..35	**R**		
6345	Currency identification code	C an..3	**N**		
6343	Currency type code qualifier	C an..3	**N**		
4405	Status description code	C an..3	**N**		

Segment Notes:

This segment is used to indicate the value of the adjustment amount for the current line item.
Adjustment amounts can be given for information purposes only, i.e., not for calculation. The adjustment amount will not necessarily equal the difference between the amount due and the amount remitted.
The adjustment amount will always be expressed in terms of the remittance/payment currency.

Example:
MOA+5:5300'

5. Segments Layout

Segment number: 35

SG5	- C	999999	-	DOC-MOA-DTM-RFF-NAD-SG6-SG7-SG10
SG10	- C	9999	-	DLI-MOA-PIA-SG11-SG12
SG12	- C	10	-	AJT-MOA-RFF-SG13
RFF	- C	1	-	Reference

Function:

To specify a reference.

		EDIFACT	GS1	*	Description
C506	REFERENCE	M	**M**		
1153	Reference code qualifier	M an..3	**M**		ON = Order number (buyer) PL = Price list number PP = Purchase order change number POR = Purchase order response number VN = Order number (supplier)
1154	Reference identifier	C an..70	**R**		
1156	Document line identifier	C an..6	**N**		
4000	Reference version identifier	C an..35	**N**		
1060	Revision identifier	C an..6	**N**		

Segment Notes:

This segment is used to specify any relevant references associated to the adjustment amounts for the current line item.

Example:
RFF+PP:45126'

5. Segments Layout

Segment number: 36

SG5	- C	999999 -	DOC-MOA-DTM-RFF-NAD-SG6-SG7-SG10
SG10	- C	9999 -	DLI-MOA-PIA-SG11-SG12
SG12	- C	10 -	AJT-MOA-RFF-SG13
SG13	- C	9 -	TAX-MOA
TAX	- M	1 -	Duty/tax/fee details

Function:

To specify relevant duty/tax/fee information.

		EDIFACT	GS1	*	Description
5283	Duty or tax or fee function code qualifier	M an..3	**M**		5 = Customs duty 7 = Tax
C241	DUTY/TAX/FEE TYPE	C	**D**		
5153	Duty or tax or fee type name code	C an..3	**O**		GST = Goods and services tax VAT = Value added tax
1131	Code list identification code	C an..17	**O**		
3055	Code list responsible agency code	C an..3	**D**		
5152	Duty or tax or fee type name	C an..35	**O**		
C533	DUTY/TAX/FEE ACCOUNT DETAIL	C	**O**		
5289	Duty or tax or fee account code	M an..6	**M**		
1131	Code list identification code	C an..17	**O**		
3055	Code list responsible agency code	C an..3	**D**		
5286	Duty or tax or fee assessment basis value	C an..15	**O**		
C243	DUTY/TAX/FEE DETAIL	C	**A**		
5279	Duty or tax or fee rate code	C an..7	**O**		
1131	Code list identification code	C an..17	**O**		
3055	Code list responsible agency code	C an..3	**D**		
5278	Duty or tax or fee rate	C an..17	**R**		The actual rate of tax/duty.
5273	Duty or tax or fee rate basis code	C an..12	**O**		
1131	Code list identification code	C an..17	**O**		
3055	Code list responsible agency code	C an..3	**D**		
5305	Duty or tax or fee category code	C an..3	**D**		A = Mixed tax rate E = Exempt from tax S = Standard rate
3446	Party tax identifier	C an..20	**O**		
1227	Calculation sequence code	C an..3	**N**		

Segment Notes:

This segment is used to signify whether the processing adjustments are subject to tax.

5. Segments Layout

Segment number: 36

Example:
TAX+7+VAT+++:::21+S'

Dependency Notes:
DE C241 and 5305: Tax types and categories will differ from country to country. They are to be defined by national guidelines.

5. Segments Layout

Segment number: 37

SG5	- C	999999	-	DOC-MOA-DTM-RFF-NAD-SG6-SG7-SG10
SG10	- C	9999	-	DLI-MOA-PIA-SG11-SG12
SG12	- C	10	-	AJT-MOA-RFF-SG13
SG13	- C	9	-	TAX-MOA
MOA	- C	9	-	Monetary amount

Function:

To specify a monetary amount.

		EDIFACT	GS1	*	Description
C516	MONETARY AMOUNT	M	**M**		
5025	Monetary amount type code qualifier	M an..3	**M**		124 = Tax amount 125 = Taxable amount
5004	Monetary amount	C n..35	**R**		
6345	Currency identification code	C an..3	**N**		
6343	Currency type code qualifier	C an..3	**N**		
4405	Status description code	C an..3	**N**		

Segment Notes:

This segment is used to specify in monetary terms the amount of tax due on the current document.

Example:
MOA+124:21.80'

5. Segments Layout

Segment number: 38

UNS - M 1 - Section control				
Function: To separate header, detail and summary sections of a message. Notes: 1. To be used by message designers when required to avoid ambiguities. Mandatory only if specified for the type of message concerned.				
	EDIFACT	GS1	*	Description
0081 Section identification	M a1	**M**	*	S = Detail/summary section separation
Segment Notes: This segment is used to separate the detail and summary sections of the Remittance Advice message. Example: UNS+S'				

5. Segments Layout

Segment number: 39

MOA	- M	99 - Monetary amount			
Function: To specify a monetary amount.					
		EDIFACT	GS1	*	Description
C516	MONETARY AMOUNT	M	**M**		
5025	Monetary amount type code qualifier	M an..3	**M**	*	12 = Amount remitted 39 = Invoice total amount 77 = Invoice amount 109 = Payment discount amount 124 = Tax amount 125 = Taxable amount 138 = Total monetary discount amount 150 = Value added tax 165 = Adjustment amount 202 = Interest amount 265 = Commission amount 296 = Total authorised deduction 350 = Damage repair cost 369 = Goods and services tax 397 = Advertising amount 526 = Volume discount 527 = Product range discount
5004	Monetary amount	C n..35	**R**		
6345	Currency identification code	C an..3	**N**		
6343	Currency type code qualifier	C an..3	**N**		
4405	Status description code	C an..3	**N**		

Segment Notes:

This segment is used to indicate the total amount being remitted in this remittance advice.
The currency information for the remitted amount will already have been provided in the CUX segment at heading level.

Example:
MOA+12:456250'

5. Segments Layout

Segment number: 40

UNT - M 1 - Message trailer					
Function: To end and check the completeness of a message.					
		EDIFACT	GS1	*	Description
0074	Number of segments in the message	M n..6	**M**		The total number of segments in the message is detailed in here.
0062	Message reference number	M an..14	**M**		The message reference numbered detailed here should equal the one specified in the UNH segment.
Segment Notes: This segment is a mandatory UN/EDIFACT segment. It must always be the last segment in the message. Example: UNT+37+ME000001'					

5. Segments Layout

Segment number: 41

UNZ - M 1 - Interchange trailer					
Function: To end and check the completeness of an interchange.					
		EDIFACT	GS1	*	Description
0036	Interchange control count	M n..6	**M**		Number of messages or functional groups within an interchange.
0020	Interchange control reference	M an..14	**M**		Identical to DE 0020 in UNB segment.
Segment Notes: This segment is used to provide the trailer of an interchange. UNZ+5+12345555' DE 0036: If functional groups are used, this is the number of functional groups within the interchange. If functional groups are not used, this is the number of messages within the interchange.					

6. Examples

The following is an example of a basic Remittance Advice Message sent from a payer (buyer) to a payee (supplier) identified by the following GLNs:

5456789000017 - Payer (buyer)

3323456007896 - Payee (supplier)

The payee's account number and financial institution are identified by the account number: 2100066767883.

The Remittance Advice RA78305 sent January 8, 2002 at 12:45, and refers to a payment to be made on three outstanding invoices:

IN10039 of December 15, 2001 for 10,050 EUR

IN10048 of December 18, 2001 for 13,820 EUR

IN10049 of December 21, 2001 for 32,000 EUR

The invoicing currency is Euros and the payment currency is Pounds Sterling. A global default rate of exchange of 0.6 GBP to one EUR is provided. The rate of exchange for IN10039 is 0.61 GBP to a EUR. The payment date is identified as January 10, 2001.

For invoices IN10039 and IN10048 the amounts remitted equal the amounts due.

For invoice IN10049 the remitted amount of 13,800 GBP (23,000 EUR) instead of the invoiced amount of 32,000 EUR (19,200 GBP) is due to a short delivery. Two line items, line items 3 and 5 of the Purchase Order with buyer reference number PO1139, were not delivered. The adjusted amount is of 5,400 GBP (9,000 EUR). The two products not delivered are identified by the GTINs:

3323456000132 for a total value of 3,000 GBP (5,000 EUR)

3323456000286 for a total value of 2,400 GBP (4,000 EUR)

The total amount to be remitted is 28222.50 GBP (equivalent to 46,870 EUR calculated with the different exchange rates).

UNH+ME000001+REMADV:D:01B:UN:EAN005'	Message header
BGM+481+RA78305+9'	Remittance advice number RA78305
DTM+137:200201081245:203'	Message date and time, 12:45pm on the 8th of January 2002
DTM+138:20020110:102'	Payment date 10th of January 2002
FII+RB+2100066767883:N GYE+KREDBEBB:25:5’	Account number 2100066767883,held by N. Gye,with Kredietbank in Belgium will receive the funds
NAD+PR+5456789000017::9'	Payer is identified by GLN 5456789000017
NAD+PE+3323456007896::9'	Payee is identified by GLN 3323456007896
CUX+2:GBP:11+3:EUR:4+0.6'	Payment currency is Pounds Sterling (GBP) while the invoicing currency was Euros, with an exchange rate of 0.6 GBP to 1 EUR
DOC+380+IN10039'	Document to which payment relates is commercial invoice number IN10039
MOA+9:10050:EUR'	Amount due/payable for invoice equals 10050 EUR

6. Examples

MOA+12:6130.5'	Amount remitted equals 6130.50 GBP
DTM+137:20011215:102'	The date of the invoice is the 15th of December 2001
CUX+2:GBP:11+3:EUR:4+0.61'	Payment currency for this invoice is Pounds Sterling (GBP) while the invoicing currency was Euros, with an exchange rate of 0.61 GBP to 1 EUR
DOC+380+IN10048'	Second document to which payment relates is commercial invoice number IN10048
MOA+9:13820:EUR'	Amount due/payable for invoice equals 13820 EUR
MOA+12:8292'	Amount remitted equals 8292 GBP
DTM+137:20011218:102'	The date of the invoice is the 12th of December 2001
DOC+380+IN10049'	Third document to which payment relates is commercial invoice number IN10049
MOA+9:32000:EUR'	Amount due/payable for invoice equals 32000 EUR
MOA+12:13800'	Amount remitted equals 13800 GBP
DTM+137:20011221:102'	The date of the invoice is the 21st of December 2001
AJT+4'	First adjustment made because of a short delivery
MOA+5:5400'	Adjusted amount equals 5400 GBP
DLI+2+3'	Adjusted line identified as number 2
MOA+9:5000:EUR'	Amount due/payable for this line equals 5000 EUR
MOA+12:0'	Amount remitted equals zero
PIA+5+3323456000132:SRV'	Product on which adjustment has taken place, identified by the GTIN 3323456000132
AJT+4'	Second adjustment made because of a short delivery
MOA+5:3000'	Adjusted amount equals 3000 GBP
RFF+ON:PO1139'	Reference provided to order number PO1139
DLI+2+5'	Adjusted line identified as number 5
MOA+9:4000:EUR'	Amount due/payable for this line equals 4000 EUR
MOA+12:0'	Amount remitted equals zero
PIA+5+3323456000286:SRV'	Product on which adjustment has taken place identified by the GTIN 3323456000286

6. Examples

AJT+4'	Third adjustment made because of a short delivery
MOA+5:2400'	Adjusted amount equals 2400 GBP
RFF+ON:PO1139'	Reference provided to order number PO1139
UNS+S'	Message detail/summary separator
MOA+12:28222.5'	Total amount remitted 28222.50 GBP
UNT+40+ME000001'	Total number of segments in the message equals 40

Note:
The EDI interchange will include the UNB..UNZ segments and, if applicable, the UNG..UNE segments. (see Part I, section 5.7)